OTTOMAN & BENCH SERIES - BENCHES

½ ROUND BENCH

Product No. F013

Give your space a unique modern flair with the ½ Round Ottoman. Made of a solid piece of foam, it's an excellent choice if you're aiming for a dramatic seating display. Use it for lobbies, waiting areas, and lounges. Buy it as a stand-alone piece or buy a set to form a circle. You can even reverse two or more benches for a wave effect.

Shown with 1" Nylon Glides

DETAILS

CONSTRUCTION

- Solid foam construction
- Wood base to fit foot options
- Reinforced seams and stitching
- Made in USA
- Backed with a lifetime warranty

MODIFICATION

- Seat height
- Textile and placement
- Foot and finish options
- Stitching colors
- Embroidery

QUICK COMBOS

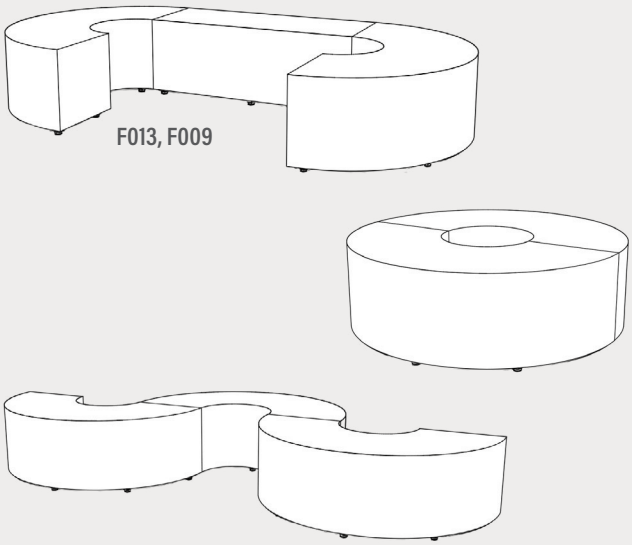

Fōmcore®
SERVE. CREATE. INSPIRE.

HOW TO SPECIFY F013

STEP 1: SEAT HEIGHT

DIMENSION (L x W)	SEAT HEIGHT
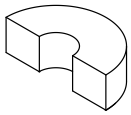 54" x 18"	14"
	16"
	18"

STEP 2: FOOT

1" STANDARD FOOT OPTIONS

Nylon Glide (G1)

Felt Glide (G1)

1" Low Profile Leg (L1)
Black

3" PREMIUM FOOT OPTIONS

3" Rectangle (R3)
Black

3" Rectangle (R3)
Silver

3" Caster (C3)

**Reference the product breakdown on back for availability.*

6" PREMIUM FOOT OPTIONS

Small Sled Leg (S16)
Silver

Small Sled Leg (S16)
Black

6" Mod Leg (M6)

6" Rectangle (R6)
Black

6" Rectangle (R6)
Silver

6" Triangle (T6)
Black

6" Triangle (T6)
Silver

6" Caster (C6)

STEP 3: GRADE AND TEXTILE

GRADES & SWATCHES

CLICK TO VIEW »

FABRIC DIRECTION & COLOR GUIDE

CLICK TO VIEW »

COLOR GUIDE

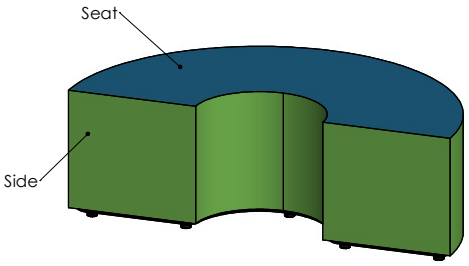

**Thread will default to match the seat textile.*

STEP 4: MODIFICATIONS (OPTIONAL)

EMBROIDERY

- Personalize your furniture with embroidery!
- We can embroider up to 12" x 15" artwork

EMBROIDERY SPECS

CLICK TO VIEW »

**Reference the product breakdown on back for availability.*

FLAME RETARDANT

- **CAL TB-133** - Optional flame retardant add on.

INCLUDE ON PURCHASE ORDER

STEP 5: CONFIGURE PART NUMBER

FILL IN YOUR PART NUMBER

F 0 1 3 - _ _ x _ _ x _ _ - _ _ _

FAMILY | L | W | H | FOOT

STEP 1 | STEP 2

EXAMPLE PART NUMBER

F 0 1 3 - 5 4 x 1 8 x 1 4 - R 3

FAMILY | L | W | H | FOOT

STEP 6: CONFIGURE DESCRIPTION

FILL IN YOUR DESCRIPTION

1. SEAT

1. Seat

LOCATION | GRADE | MANUFACTURER | PATTERN | COLOR

2. SIDE

2. Side

LOCATION | GRADE | MANUFACTURER | PATTERN | COLOR

STEP 3

FOOT

NAME/COLOR

EMBROIDERY*

LOCATION | NAME

FIRE RETARDANCY*

EXAMPLE DESCRIPTION

1. SEAT

LOCATION	GRADE	MANUFACTURER	PATTERN	COLOR
1. Seat	1	Spradling	Silvertex	Sage

2. SIDE

LOCATION	GRADE	MANUFACTURER	PATTERN	COLOR
2. Side	3	Momentum	Tribeca	Fossil

FOOT

3" Rectangle Leg - Black

NAME/COLOR

EMBROIDERY*

LOCATION	NAME
Seat	Rocket Logo

**Optional add-ons. Reference product breakdown for availability.*

EXAMPLE CONFIGURATION

F013-54x18x14-R3

1. Seat: Grade 1, Spradling, Silvertex, Sage | 2. Side: Grade 3, Momentum, Tribeca, Fossil

Foot: 3" Rectangle Leg Black | Embroidery: Seat, Rocket logo | CAL TB-133

PRODUCT BREAKDOWN

½ ROUND BENCH (F013)

Product No.	Dimen./Weight (L x W x H)	FOOT AND FINISH OPTIONS											INTEGRATED POWER OPTIONS										HPL	Emb.
		Zip	Standard		3" Premium		6" Premium						Standard		3" Premium		6" Premium							
		Z	G1	L1	R3	C3	S16	S29	C6	T6	R6	M6	G1	L1	R3	C3	S16	S29	C6	T6	R6	M6		
F013-54x18x14	54" x 18" x 14" 27 lbs.	–	✓	✓	✓	✓	✓	–	✓	✓	✓	✓	–	–	–	–	–	–	–	–	–	–	–	✓
F013-54x18x16	54" x 18" x 16" 29 lbs.	–	✓	✓	✓	✓	✓	–	✓	✓	✓	✓	–	–	–	–	–	–	–	–	–	–	–	✓
F013-54x18x18	54" x 18" x 18" 30 lbs.	–	✓	✓	✓	✓	✓	–	✓	✓	✓	✓	–	–	–	–	–	–	–	–	–	–	–	✓

Fōmcore®
SERVE. CREATE. INSPIRE.

1770 E. Keating Ave - Muskegon, MI 49442 · Tel: 231.366.4791 · **www.fomcore.com**

ADDITIONAL RESOURCES

CLICK TO VIEW »